Project:

Lifecycle:

PAGE	CONTENT	NOTES
1	Table of Contents	This page
2	Fuse Box, Maxi Fuse	Includes wire references and fuse values
3	Power Sources	Also OBD-II, Aux Power
4	Exterior Lamps - Markers, DIs, HL	Also Side Repeaters and notes on Fed/Euro configurations
5	Switchpack	Also seat heaters, aux battery, glove box, KEY_ON, FUSED_KEY_ON
6	Instrument Pack / VDS	
7	Windscreen Wash/Wipe SRS, Horns	
8	Window Lift / Door Locks	
9	HVAC Controls, Panel & Actuators	
10	Vehicle Management System	Also Tailgate release and Homelink Module Option
11	Power Electronics Module	Also Transmission Control Module (TCM) connector and Gear Selector
12	Alarm System / Siren	Also Trunk (Boot) Lid and Hood (Bonnet) sensors
13	Anti-lock Braking (ABS)	Also Tire Pressure Monitoring System (TPMS) and Vacuum Pump
14	Audio System Wiring	
15	High End Audio System	
16	CAN Network	
17	Splice Tables	
18		
19		
20		
21		
22		
23		
24		
25		
26		
27		
28		

Content

This wiring diagram is based on the following harness drawings
- Front Harness : 02-008039-00 rev AA
- Mid Harness : 02-006864-00 rev AA
- Rear Harness : 02-007971-00 rev AA
- Center Console Harness : 02-006914-00 rev AA
- Driver Door Harness : 02-003192-00 rev AA
- Passenger Door Harness : 02-003193-00 rev AA
- First Responder Loop : 02-007541-00 rev AB

Notes:
- Pages formatted to print on 17" x 11" paper. (similar to A3)
- A given splice may appear on multiple pages for clarity in the wiring depicted on that page.
- Some connectors are split across multiple pages to aid readability

LEGEND

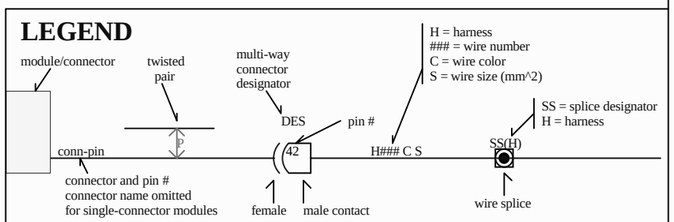

Harness Designators:
F = Front Harness
M = Mid Harness
R = Rear Harness
C = Center Console Harness
D = Driver Door Harness
P = Passenger Door Harness

Multi-way Connector Designators:
FHC = Front Harness Connector (to mid harness)
RHC = Rear Harness Connector (to mid harness)
CCHC = Center console harness connector
DDHC = Driver Door Harness Connector
PDHC = Passenger Door Harness Connector
FRL = First Responder Loop

Colors:
B = Black
N = Brown
R = Red
O = Orange
Y = Yellow
G = Green
U = Blue
P = Purple
S = Gray (slate)
W = White
K = pink
LG = Light Green

TESLA MOTORS, Inc.

ORIGINATOR: B. Moerdyk

DRAWN BY: B. Moerdyk

CHECKED BY: * DATE *

ENG APPVL * DATE *

ITEM NAME: Table of Contents

ITEM NO. 98-000845-00

REVISION: AA

DATE: 7/15/2009

DO NOT SCALE DRAWING

SHEET 1 OF 17

THE INFORMATION CONTAINED HEREIN IS DEEMED TO BE CONFIDENTIAL, PROPRIETARY, AND A TRADE SECRET OF TESLA MOTORS. THIS INFORMATION MAY NOT BE USED, REPRODUCED, OR DISCLOSED AS THE DIRECT OR INDIRECT BASIS FOR THE DEVELOPMENT, MANUFACTURE, OR SALE OF PROCESSES OR PRODUCTS WITHOUT THE EXPRESSED WRITTEN CONSENT OF TESLA MOTORS.

FUSE	APPLICATION	Val.	CAVITY A			CAVITY B		
			NO.	COL	SIZE	NO.	COL	SIZE
1	ABS Controller (Logic)	10A	F18	N	0.75	F19	P	0.75
2	Aux Power Socket	15A	F299	NR	2.0	F161	R	2.0
3	Interior Fan	20A	F297	BG	1.5	F406	GB	1.5
4	Wiper Motor	15A	F174	W	1.5	F58	G	1.5
5	Accessory	7.5A	F303	YG	0.75	F127 F134	GR GR	0.5 0.5
6	Directionals / Side Markers	10A	F295	NP	2.0	F38	P	1.0
7	Ignition Services	10A	F169	W	2.0	F20	G	2.0
8	Battery Services	5A	F239	N	0.75	F164 F228	P P	0.5 0.5
9	Horn	15A	F172	N	1.5	F30	P	1.5
10	Interior / Trunk Lamps	7.5A	F292	N	1.0	F181 F182	P P	0.5 0.5
11	Switch Pack / Seat Heaters	20A	F94	N	2.0	F10 F14	P P	1.0 1.0
12	Radiator Fans	20A	F194	N	2.0	F503 F193	NO NO	1.5 1.5
13	Alarm	7.5A	F490	NB	1.0	F491 F493	PG PG	0.5 0.5
14	SwitchPack ACC IN	7.5A	F301	N	1.0	F176	NG	1.0
15	RH Low Beam Headlamp	7.5A	F291	NP	2.0	F213	NS	2.0
16	LH Low Beam Headlamp	7.5A	F290	NP	2.0	F3	NU	2.0
17	LH High Beam Headlamp	7.5A	F289	N	2.0	F77	NR	2.0
18	RH High Beam Headlamp	7.5A	F288	N	2.0	F214	NB	2.0
19	Passenger's Window	20A	F329	N	2.0	F300	P	2.0
20	Driver's Window	20A	F328	N	2.0	F330	P	2.0
21	VMS - Door, Trunk Rel.	10A	F95	NP	0.75	F6	P	0.75
22	Vacuum Pump	7.5A	F116	W	0.75	F326	G	0.5
23	ABS "SHED"	15A	F87	N	1.5	F269	P	1.5
24	Amplifier Option	15A	F56	N	1.0	F162	P	1.0
25	Battery "KEY ON"	30A	F125	N	3.0	F268	P	3.0
26	Stop Lamps	5A	F468	NP	1.0	F47	P	0.5
27	APS Services	7.5A	F488	N	1.5	F487	NY	1.5

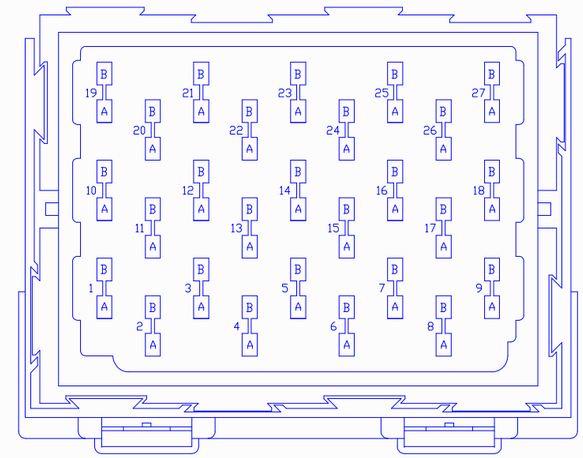

MAXI FUSE

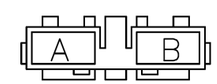

NOTE:
MAXI FUSE LOCATED BEHIND
MAIN FUSEBOX ON TOP OF
DASH CROSS BEAM

FUSE	APPLICATION	Val.	CAVITY A			CAVITY B		
			NO.	COL	SIZE	NO.	COL	SIZE
MAXI	ABS High-Current Loads	60A	F2	N	6.0	F126 F7	NW NW	4.0 4.0

THE INFORMATION CONTAINED HEREIN IS DEEMED TO BE CONFIDENTIAL, PROPRIETARY, AND A TRADE SECRET OF TESLA MOTORS. THIS INFORMATION MAY NOT BE USED, REPRODUCED, OR DISCLOSED AS THE DIRECT OR INDIRECT BASIS FOR THE DEVELOPMENT, MANUFACTURE, OR SALE OF PROCESSES OR PRODUCTS WITHOUT THE EXPRESSED WRITTEN CONSENT OF TESLA MOTORS.

Project:
Lifecycle:

TESLA MOTORS, Inc.

ORIGINATOR: B. Moerdyk
DRAWN BY: B. Moerdyk
CHECKED BY: * DATE *
ENG APPVL: * DATE *

ITEM NAME: Fuse Assignemnts and Values
ITEM NO. 98-000845-00
REVISION: AA
DATE: 7/15/2009
DO NOT SCALE DRAWING
SHEET 2 OF 17

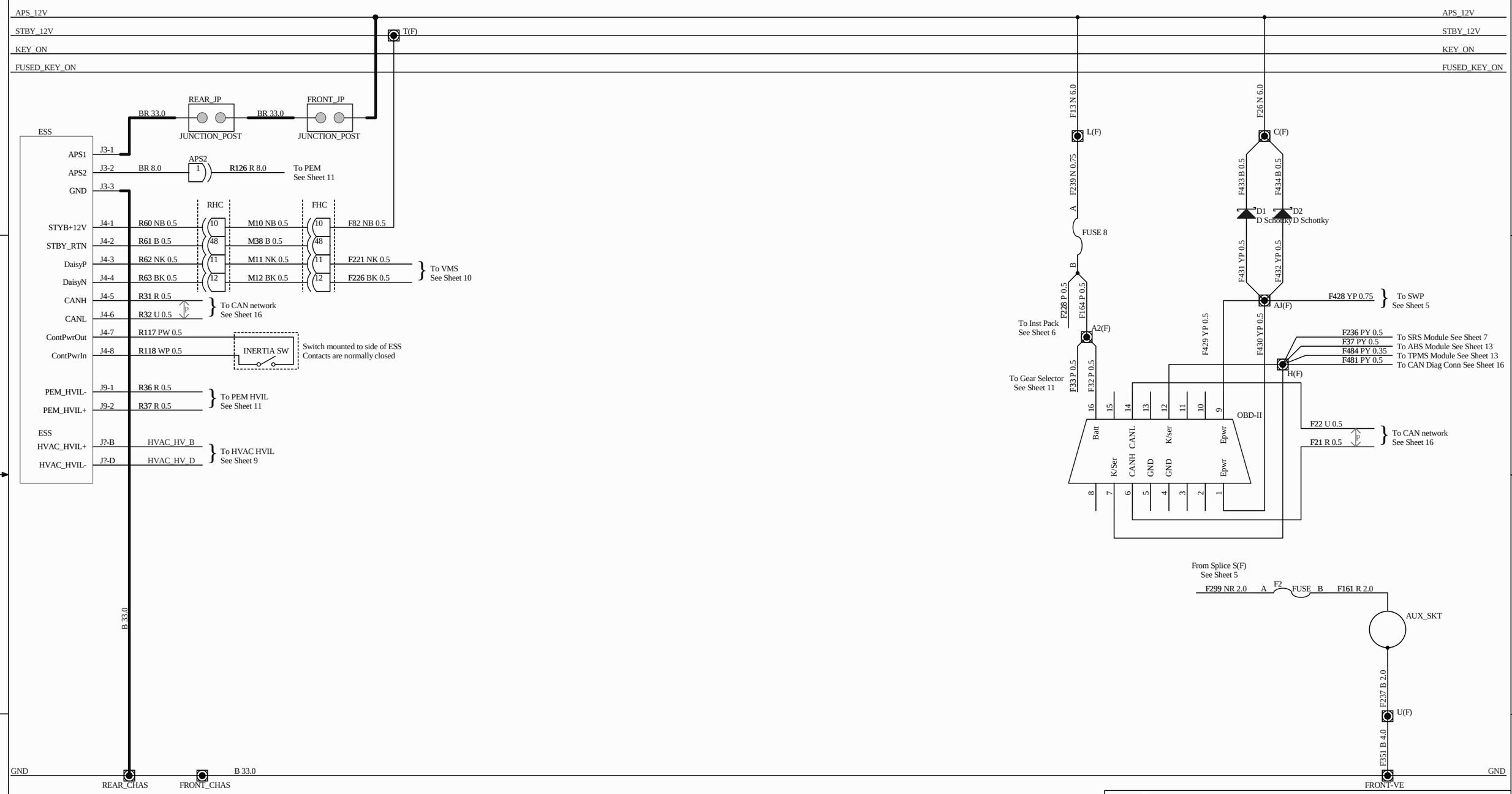

NOTES:
Auxilliary battery is on Sheet 5 (SWP)

THE INFORMATION CONTAINED HEREIN IS DEEMED TO BE CONFIDENTIAL, PROPRIETARY, AND A TRADE SECRET OF TESLA MOTORS. THIS INFORMATION MAY NOT BE USED, REPRODUCED, OR DISCLOSED AS THE DIRECT OR INDIRECT BASIS FOR THE DEVELOPMENT, MANUFACTURE, OR SALE OF PROCESSES OR PRODUCTS WITHOUT THE EXPRESSED WRITTEN CONSENT OF TESLA MOTORS.

Project:

Lifecycle:

TESLA MOTORS, Inc.

ORIGINATOR: B. Moerdyk

DRAWN BY: B. Moerdyk

CHECKED BY: * DATE *

ENG APPVL * DATE *

ITEM NAME: Power Sources, OBD-II

ITEM NO. 98-000845-00

REVISION: AA

DATE: 7/15/2009

DO NOT SCALE DRAWING

SHEET 3 OF 17

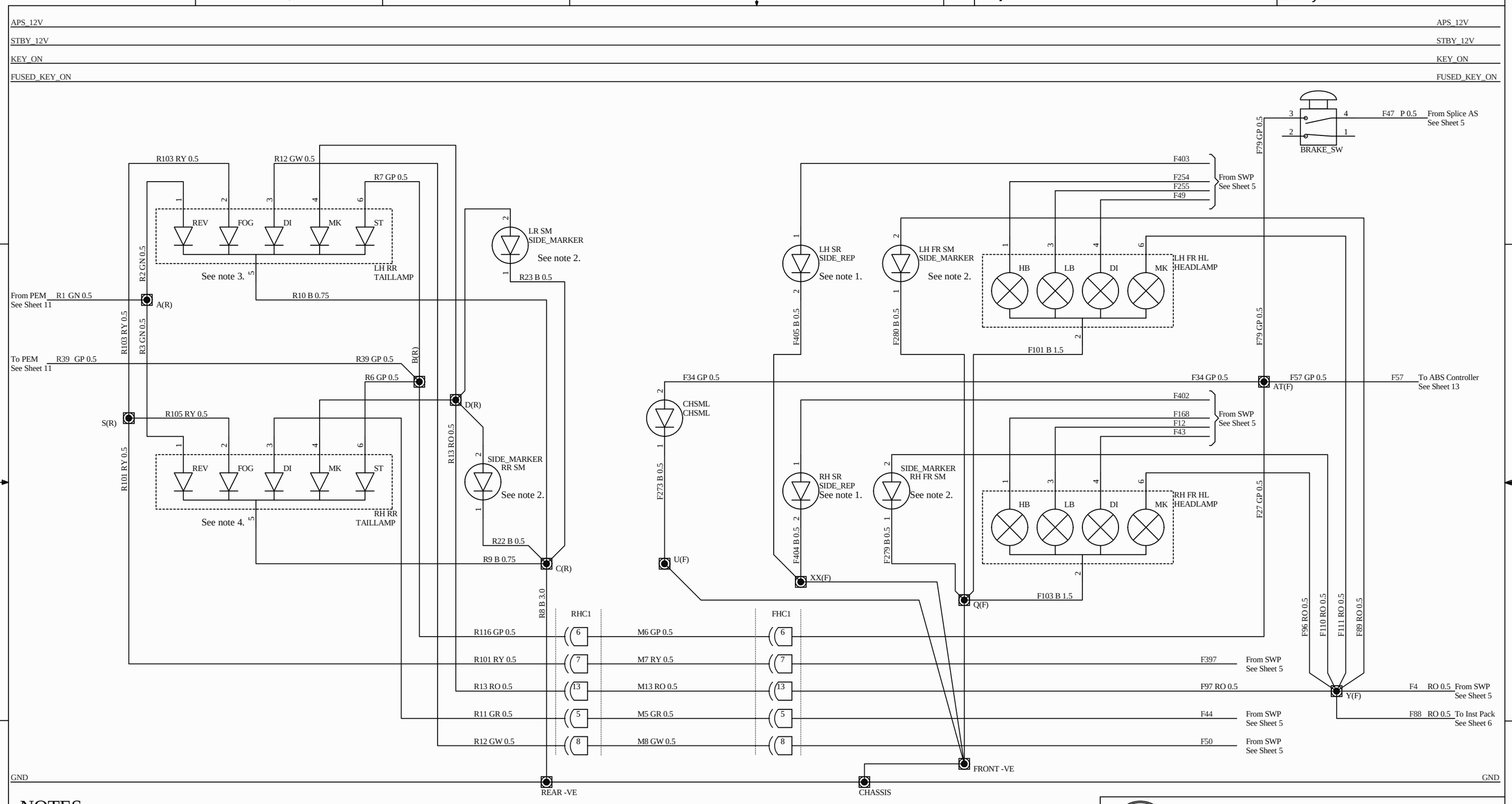

NOTES:
1) Side repeaters not connected for federal configuration
2) Side markers not connected for Euro Configuration
3) Fog lamp present in LH drive models only where rear fog is required, others models have reverse lamp.
4) Fog lamp present in RH drive models only where rear fog is required, others models have reverse lamp.

THE INFORMATION CONTAINED HEREIN IS DEEMED TO BE CONFIDENTIAL, PROPRIETARY, AND A TRADE SECRET OF TESLA MOTORS. THIS INFORMATION MAY NOT BE USED, REPRODUCED, OR DISCLOSED AS THE DIRECT OR INDIRECT BASIS FOR THE DEVELOPMENT, MANUFACTURE, OR SALE OF PROCESSES OR PRODUCTS WITHOUT THE EXPRESSED WRITTEN CONSENT OF TESLA MOTORS.

TESLA MOTORS, Inc.

ORIGINATOR: B. Moerdyk	ITEM NAME: Exterior Lamps
DRAWN BY: B. Moerdyk	
CHECKED BY: * DATE *	ITEM NO. 98-000845-00 REVISION: AA DATE: 7/15/2009
ENG APPVL * DATE *	DO NOT SCALE DRAWING SHEET 4 OF 17

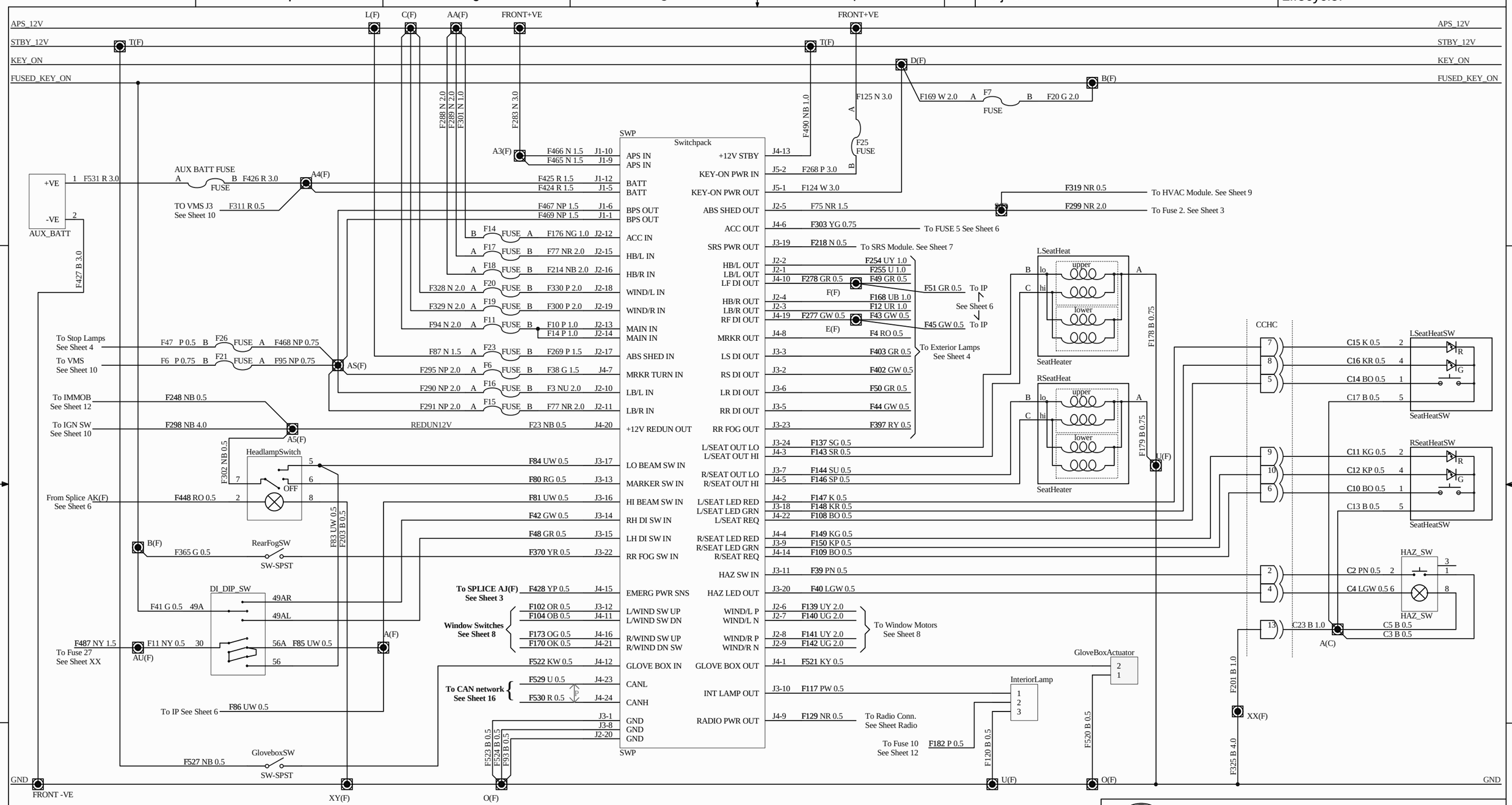
Project:
Lifecycle:
APS_12V
STBY_12V
KEY_ON
FUSED_KEY_ON
FRONT+VE
L(F)
C(F)
AA(F)
T(F)
D(F)
B(F)
A3(F)
A4(F)
AS(F)
A5(F)
AU(F)
A(F)
U(F)
O(F)
XY(F)
XX(F)
A(C)
GND
FRONT -VE
AUX_BATT
+VE
-VE
AUX BATT FUSE
F531 R 3.0
F426 R 3.0
F311 R 0.5
TO VMS J3
See Sheet 10
F427 B 3.0
F288 N 2.0
F289 N 2.0
F301 N 1.0
F283 N 3.0
F490 NB 1.0
F125 N 3.0
F25 FUSE
F169 W 2.0
F7 FUSE
F20 G 2.0
SWP
Switchpack
APS IN
BATT
BPS OUT
ACC IN
HB/L IN
HB/R IN
WIND/L IN
WIND/R IN
MAIN IN
ABS SHED IN
MRKR TURN IN
LB/L IN
LB/R IN
+12V REDUN OUT
LO BEAM SW IN
MARKER SW IN
HI BEAM SW IN
RH DI SW IN
LH DI SW IN
RR FOG SW IN
EMERG PWR SNS
L/WIND SW UP
L/WIND SW DN
R/WIND SW UP
R/WIND DN SW
GLOVE BOX IN
CANL
CANH
GND
+12V STBY
KEY-ON PWR IN
KEY-ON PWR OUT
ABS SHED OUT
ACC OUT
SRS PWR OUT
HB/L OUT
LB/L OUT
LF DI OUT
HB/R OUT
LB/R OUT
RF DI OUT
MRKR OUT
LS DI OUT
RS DI OUT
LR DI OUT
RR DI OUT
RR FOG OUT
L/SEAT OUT LO
L/SEAT OUT HI
R/SEAT OUT LO
R/SEAT OUT HI
L/SEAT LED RED
L/SEAT LED GRN
L/SEAT REQ
R/SEAT LED RED
R/SEAT LED GRN
R/SEAT REQ
HAZ SW IN
HAZ LED OUT
WIND/L P
WIND/L N
WIND/R P
WIND/R N
GLOVE BOX OUT
INT LAMP OUT
RADIO PWR OUT
To SRS Module. See Sheet 7
To FUSE 5 See Sheet 6
To HVAC Module. See Sheet 9
To Fuse 2. See Sheet 3
To IP
See Sheet 6
To Exterior Lamps
See Sheet 4
To SPLICE AJ(F)
See Sheet 3
Window Switches
See Sheet 8
To Window Motors
See Sheet 8
To CAN network
See Sheet 16
To Radio Conn.
See Sheet Radio
To Fuse 10
See Sheet 12
To Stop Lamps
See Sheet 4
To VMS
See Sheet 10
To IMMOB
See Sheet 12
To IGN SW
See Sheet 10
From Splice AK(F)
See Sheet 6
To IP See Sheet 6
To Fuse 27
See Sheet XX
HeadlampSwitch
OFF
RearFogSW
SW-SPST
DI_DIP_SW
49AR
49AL
56A
56
GloveboxSW
SW-SPST
LSeatHeat
RSeatHeat
upper
lower
SeatHeater
CCHC
LSeatHeatSW
RSeatHeatSW
SeatHeatSW
HAZ_SW
GloveBoxActuator
InteriorLamp
TESLA MOTORS, Inc.
ORIGINATOR:
B. Moerdyk
DRAWN BY:
B. Moerdyk
CHECKED BY:
ENG APPVL
DATE
ITEM NAME:
SwitchPack (SWP)
ITEM NO.
98-000845-00
REVISION: AA
DATE: 7/15/2009
DO NOT SCALE DRAWING
SHEET 5 OF 17
THE INFORMATION CONTAINED HEREIN IS DEEMED TO BE CONFIDENTIAL, PROPRIETARY, AND A TRADE SECRET OF TESLA MOTORS. THIS INFORMATION MAY NOT BE USED, REPRODUCED, OR DISCLOSED AS THE DIRECT OR INDIRECT BASIS FOR THE DEVELOPMENT, MANUFACTURE, OR SALE OF PROCESSES OR PRODUCTS WITHOUT THE EXPRESSED WRITTEN CONSENT OF TESLA MOTORS.

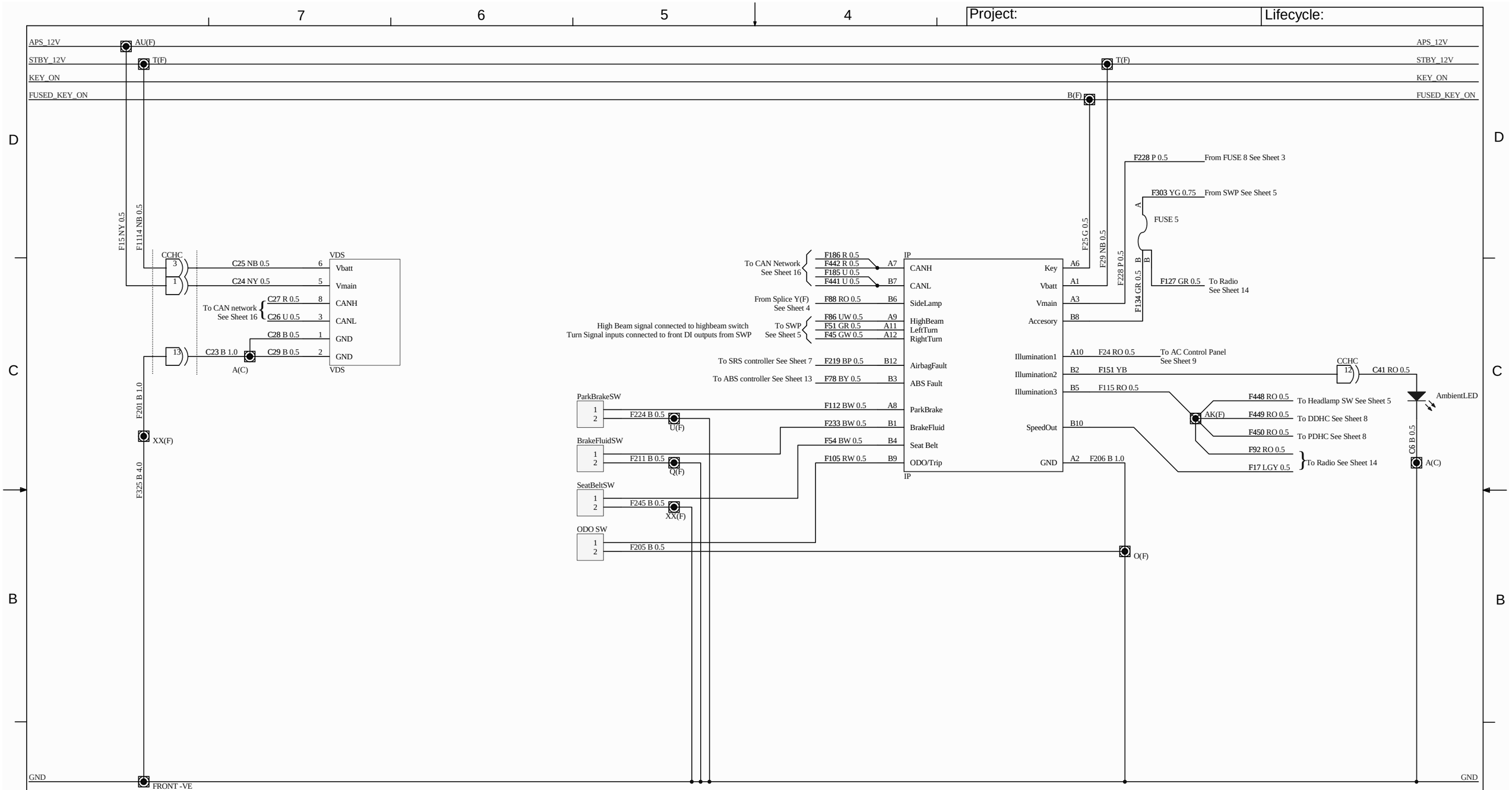

TESLA MOTORS, Inc.

ORIGINATOR: B. Moerdyk	ITEM NAME: Instrument Pack / Vehicle Display System
DRAWN BY: B. Moerdyk	
CHECKED BY: * DATE *	ITEM NO. 98-000845-00 REVISION: AA DATE: 7/15/2009
ENG APPVL * DATE *	DO NOT SCALE DRAWING SHEET 6 OF 17

THE INFORMATION CONTAINED HEREIN IS DEEMED TO BE CONFIDENTIAL, PROPRIETARY, AND A TRADE SECRET OF TESLA MOTORS. THIS INFORMATION MAY NOT BE USED, REPRODUCED, OR DISCLOSED AS THE DIRECT OR INDIRECT BASIS FOR THE DEVELOPMENT, MANUFACTURE, OR SALE OF PROCESSES OR PRODUCTS WITHOUT THE EXPRESSED WRITTEN CONSENT OF TESLA MOTORS.

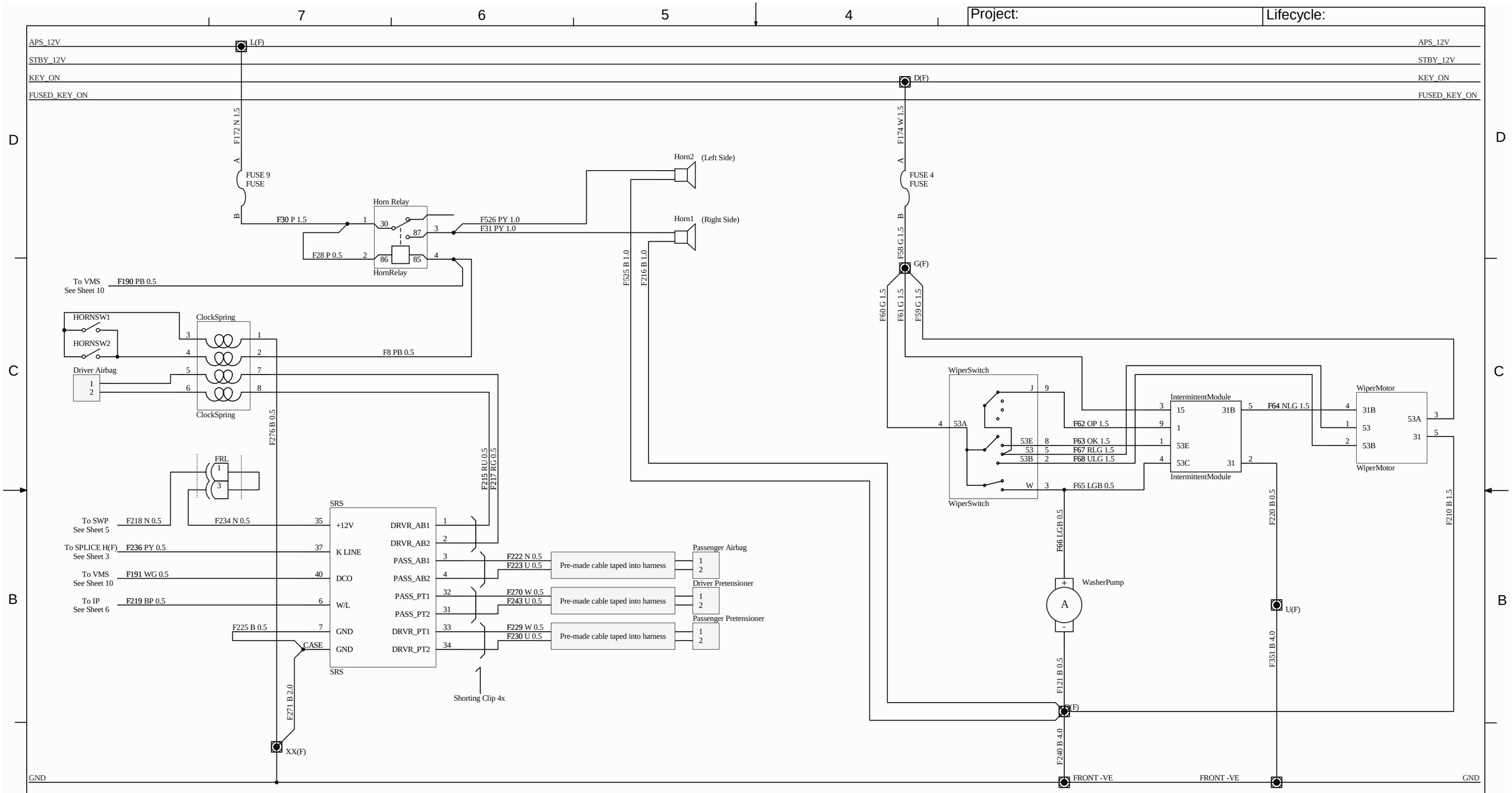

TESLA MOTORS, Inc.

ORIGINATOR: B. Moerdyk	ITEM NAME: Wash/Wipe System + Horns + SRS/Airbags
DRAWN BY: B. Moerdyk	
CHECKED BY: * DATE *	ITEM NO. 98-000845-00 REVISION: AA DATE: 7/15/2009
ENG APPVL * DATE *	DO NOT SCALE DRAWING SHEET 7 OF 17

THE INFORMATION CONTAINED HEREIN IS DEEMED TO BE CONFIDENTIAL, PROPRIETARY, AND A TRADE SECRET OF TESLA MOTORS. THIS INFORMATION MAY NOT BE USED, REPRODUCED, OR DISCLOSED AS THE DIRECT OR INDIRECT BASIS FOR THE DEVELOPMENT, MANUFACTURE, OR SALE OF PROCESSES OR PRODUCTS WITHOUT THE EXPRESSED WRITTEN CONSENT OF TESLA MOTORS.

Project:

Lifecycle:

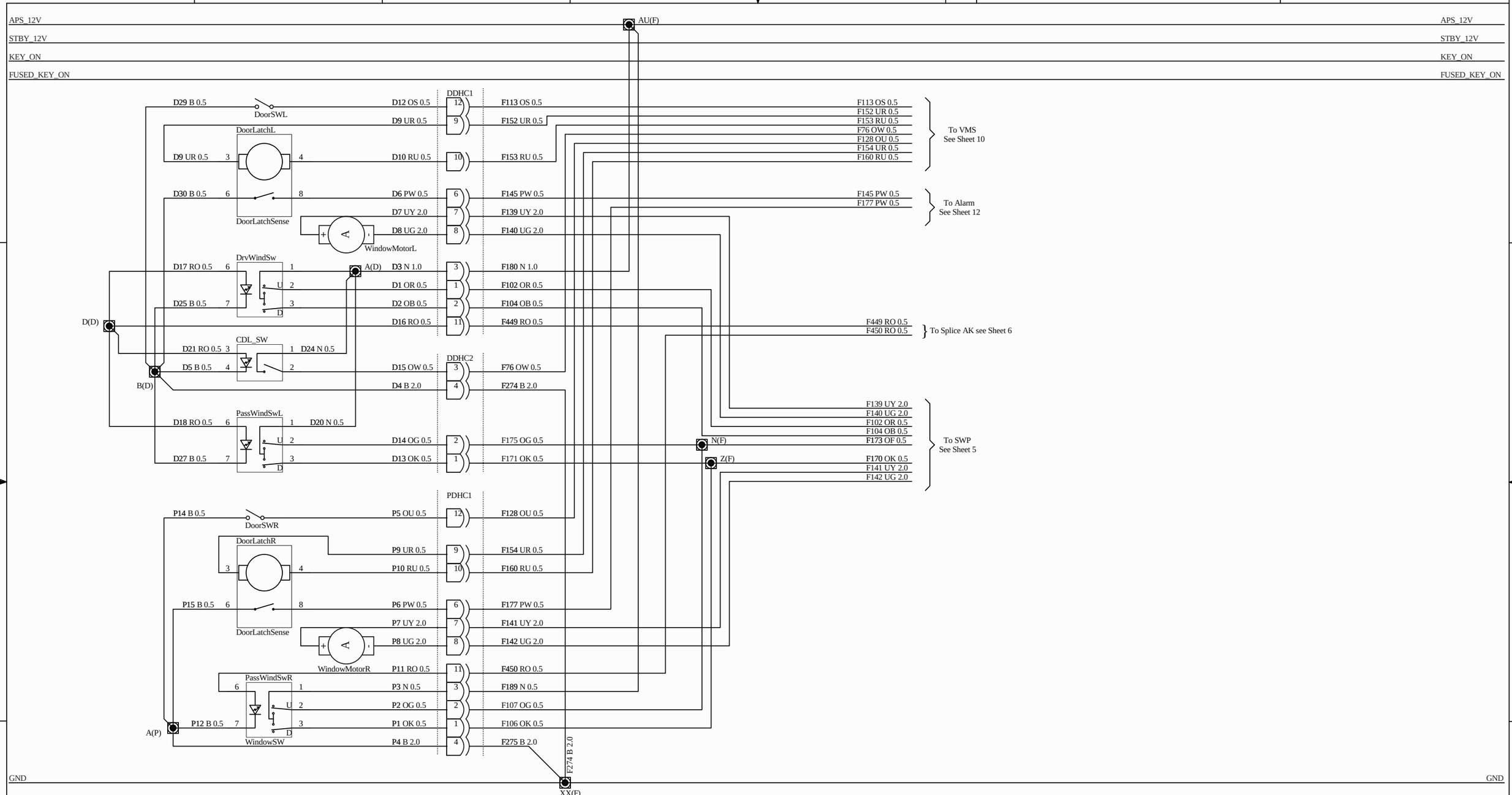

NOTES:

1) For LHD, "Driver" refers to left side of vehicle, for RHD, "Driver" refers to right side of vehicle.

THE INFORMATION CONTAINED HEREIN IS DEEMED TO BE CONFIDENTIAL, PROPRIETARY, AND A TRADE SECRET OF TESLA MOTORS. THIS INFORMATION MAY NOT BE USED, REPRODUCED, OR DISCLOSED AS THE DIRECT OR INDIRECT BASIS FOR THE DEVELOPMENT, MANUFACTURE, OR SALE OF PROCESSES OR PRODUCTS WITHOUT THE EXPRESSED WRITTEN CONSENT OF TESLA MOTORS.

TESLA MOTORS, Inc.

ORIGINATOR: B. Moerdyk

DRAWN BY: B. Moerdyk

CHECKED BY: * DATE *

ENG APPVL * DATE *

ITEM NAME: Windows, Door Latches, Locking

ITEM NO. 98-000845-00

REVISION: AA

DATE: 7/15/2009

DO NOT SCALE DRAWING

SHEET 8 OF 17

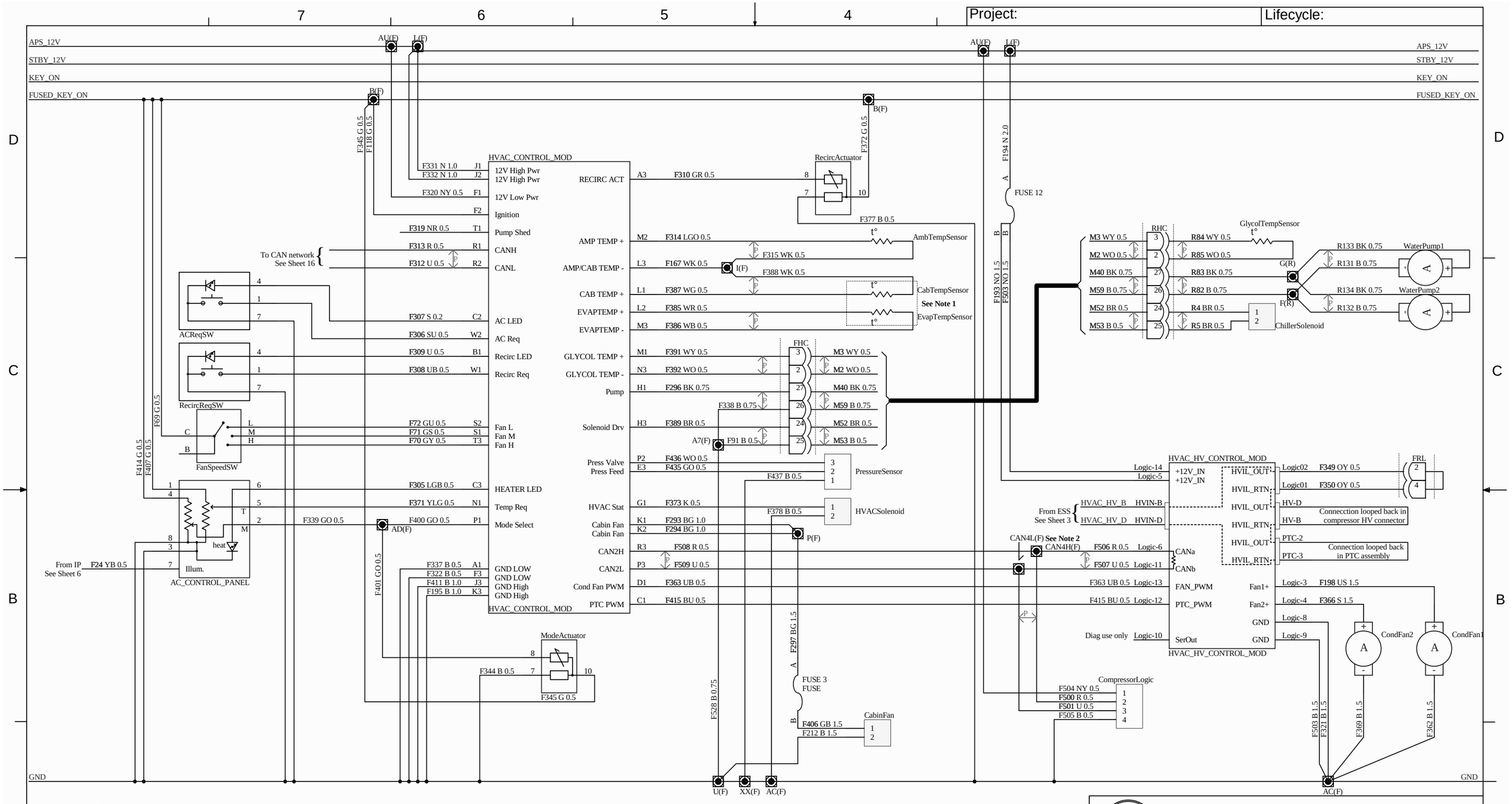

NOTES:

1) Cabin and Evap temperature sensor share a single connector
2) CAN4 splices near compressor. "CAN4" is name only, not associated with CAN4 bus from VMS to ODB-II connector

THE INFORMATION CONTAINED HEREIN IS DEEMED TO BE CONFIDENTIAL, PROPRIETARY, AND A TRADE SECRET OF TESLA MOTORS. THIS INFORMATION MAY NOT BE USED, REPRODUCED, OR DISCLOSED AS THE DIRECT OR INDIRECT BASIS FOR THE DEVELOPMENT, MANUFACTURE, OR SALE OF PROCESSES OR PRODUCTS WITHOUT THE EXPRESSED WRITTEN CONSENT OF TESLA MOTORS.

TESLA MOTORS, Inc.

ORIGINATOR: B. Moerdyk	ITEM NAME: HVAC system
DRAWN BY: B. Moerdyk	
CHECKED BY: * DATE *	ITEM NO. 98-000845-00 REVISION: AA DATE: 7/15/2009
ENG APPVL * DATE *	DO NOT SCALE DRAWING SHEET 9 OF 17

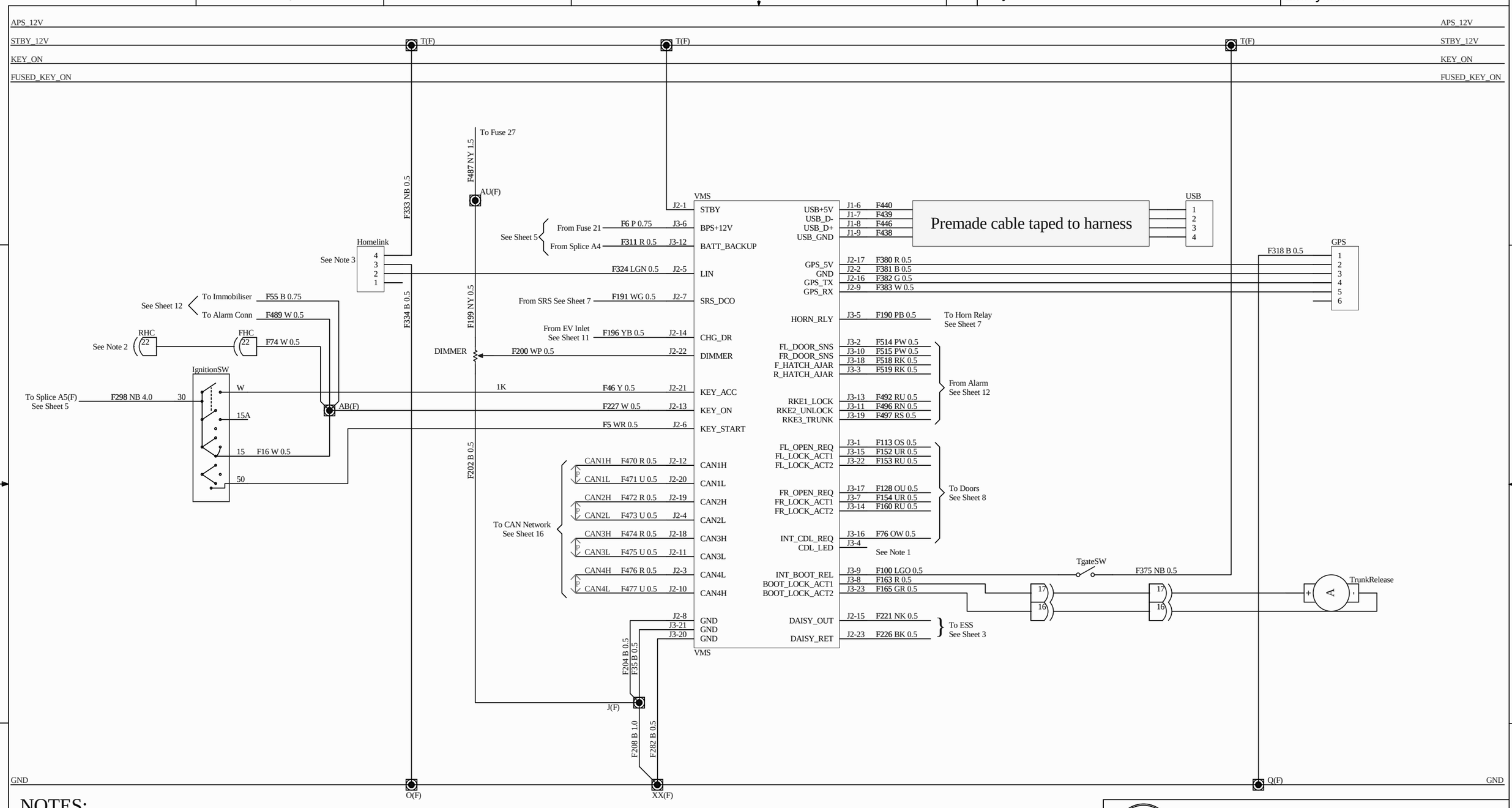

NOTES:

1) CDL LED fuction moved to IP
2) Uninterrupted Key ON signal not presently used in rear harness.
3) Homelink module only installed with certain option packages. Check BOM.

THE INFORMATION CONTAINED HEREIN IS DEEMED TO BE CONFIDENTIAL, PROPRIETARY, AND A TRADE SECRET OF TESLA MOTORS. THIS INFORMATION MAY NOT BE USED, REPRODUCED, OR DISCLOSED AS THE DIRECT OR INDIRECT BASIS FOR THE DEVELOPMENT, MANUFACTURE, OR SALE OF PROCESSES OR PRODUCTS WITHOUT THE EXPRESSED WRITTEN CONSENT OF TESLA MOTORS.

TESLA MOTORS, Inc.

ORIGINATOR: B. Moerdyk
DRAWN BY: B. Moerdyk
CHECKED BY: * DATE *
ENG APPVL: * DATE *

ITEM NAME: Vehicle Management System (VMS)
ITEM NO. 98-000845-00
REVISION: AA
DATE: 7/15/2009
DO NOT SCALE DRAWING
SHEET 10 OF 17

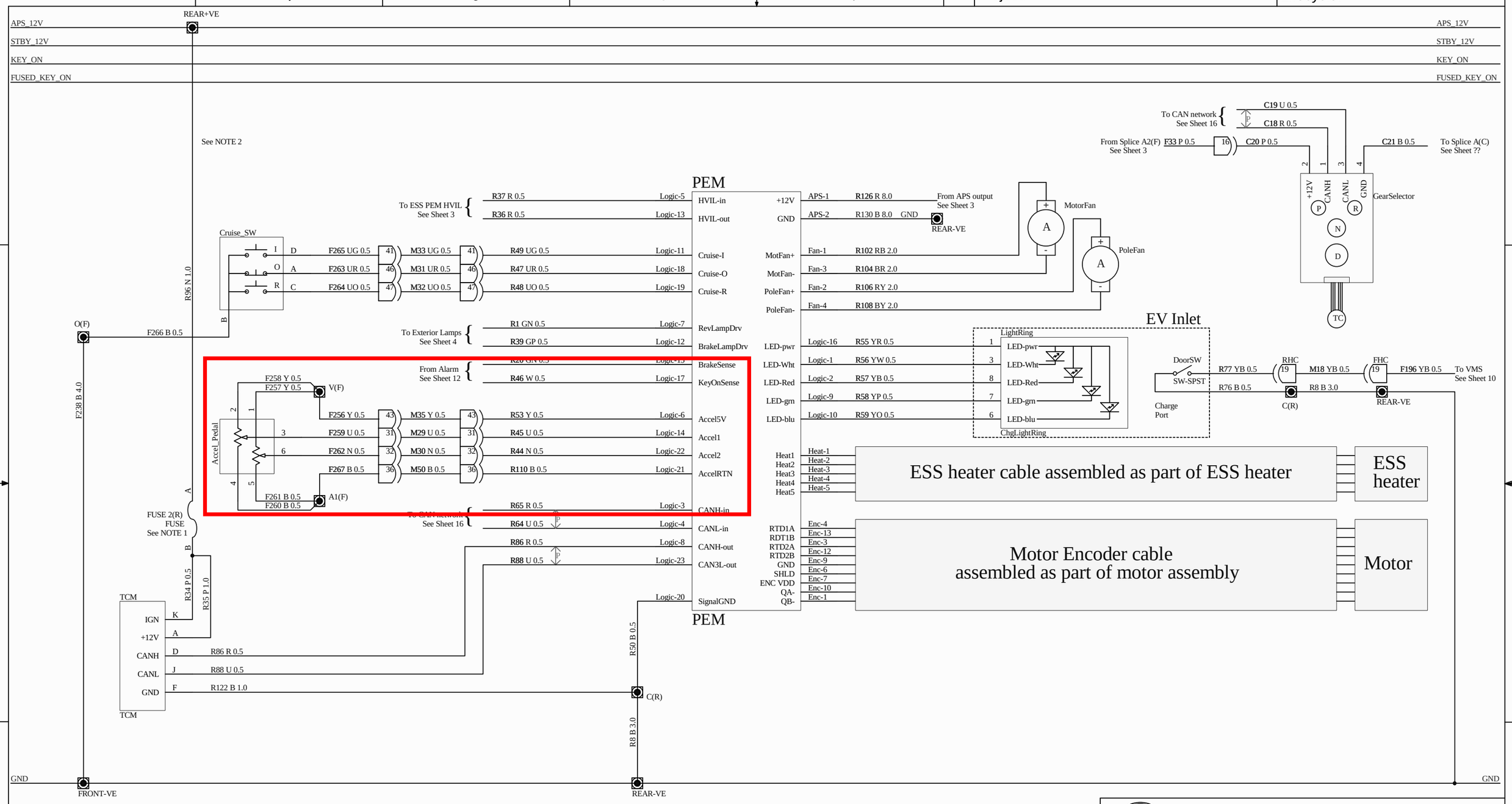

NOTES:

1) Rear fuse box mounted to right side of trunk box, near PEM
   Some vehicles may have a single in-line fuse in place of fusebox.
2) APS lead for TCM / rear fuse box has red PVC tube over wire near Rear +VE terminal block

THE INFORMATION CONTAINED HEREIN IS DEEMED TO BE CONFIDENTIAL, PROPRIETARY, AND A TRADE SECRET OF TESLA MOTORS. THIS INFORMATION MAY NOT BE USED, REPRODUCED, OR DISCLOSED AS THE DIRECT OR INDIRECT BASIS FOR THE DEVELOPMENT, MANUFACTURE, OR SALE OF PROCESSES OR PRODUCTS WITHOUT THE EXPRESSED WRITTEN CONSENT OF TESLA MOTORS.

TESLA MOTORS, Inc.

ORIGINATOR: B. Moerdyk
DRAWN BY: B. Moerdyk
CHECKED BY: * DATE *
ENG APPVL * DATE *

ITEM NAME: Power Electronics Module (PEM) + TCM
ITEM NO. 98-000845-00
REVISION: AA
DATE: 7/15/2009
DO NOT SCALE DRAWING
SHEET 11 OF 17

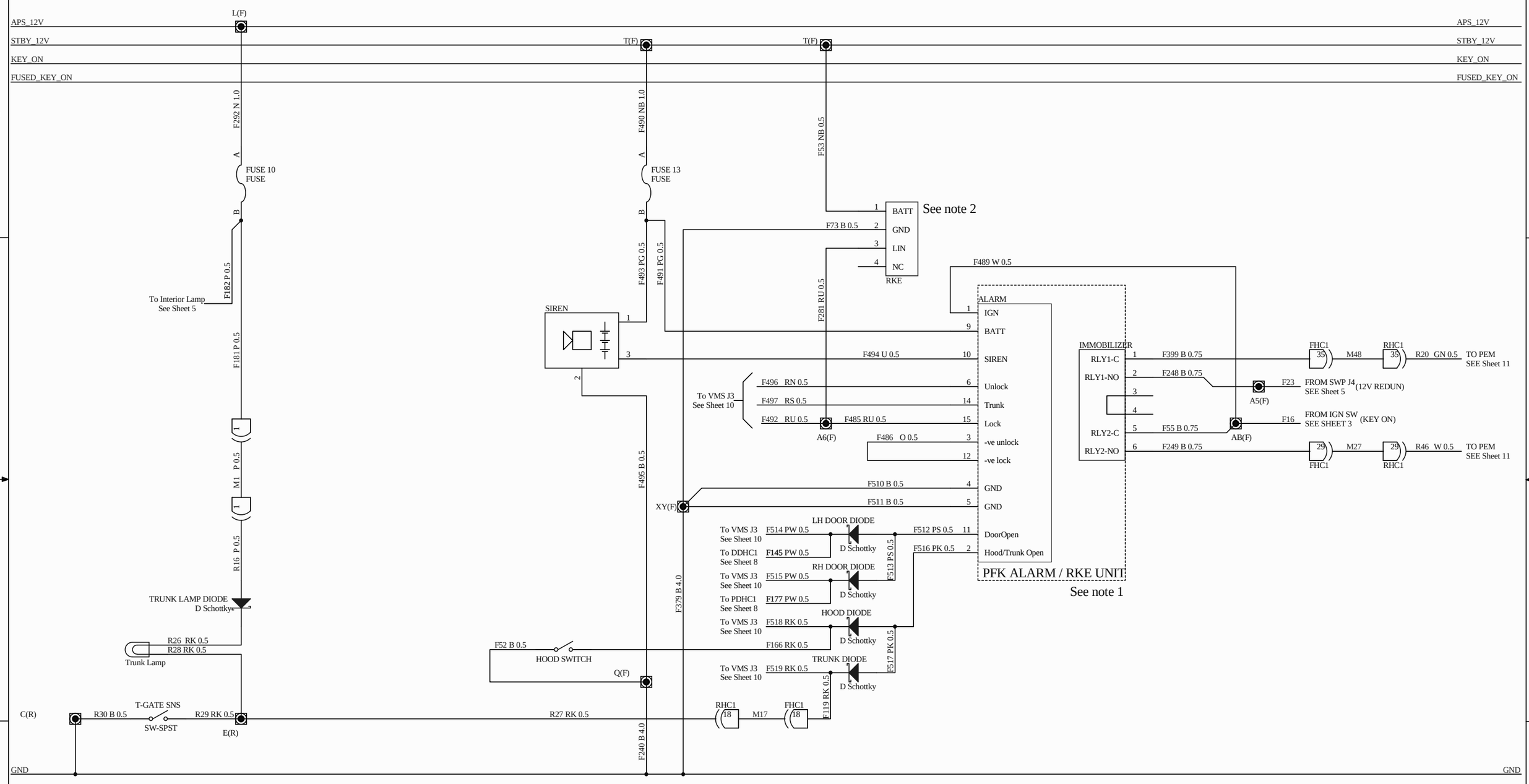

NOTES:

1) PFK ALARM / RKE UNIT:
   Federal cars will have an RKE-type unit of same form-factor as Euro Immobilizer Unit.
   Internally, immobiliser circuit will always be closed.
   Behavior of door/hood/trunk inputs and lock/unlock/trunk outputs will be the same

2) RKE unit no longer populated in vehicle

THE INFORMATION CONTAINED HEREIN IS DEEMED TO BE CONFIDENTIAL, PROPRIETARY, AND A TRADE SECRET OF TESLA MOTORS. THIS INFORMATION MAY NOT BE USED, REPRODUCED, OR DISCLOSED AS THE DIRECT OR INDIRECT BASIS FOR THE DEVELOPMENT, MANUFACTURE, OR SALE OF PROCESSES OR PRODUCTS WITHOUT THE EXPRESSED WRITTEN CONSENT OF TESLA MOTORS.

TESLA MOTORS, Inc.

ORIGINATOR: B. Moerdyk	ITEM NAME: Alarm Unit
DRAWN BY: B. Moerdyk	
CHECKED BY: * DATE *	ITEM NO. 98-000845-00 REVISION: AA DATE: 7/15/2009
ENG APPVL * DATE *	DO NOT SCALE DRAWING SHEET 12 OF 17

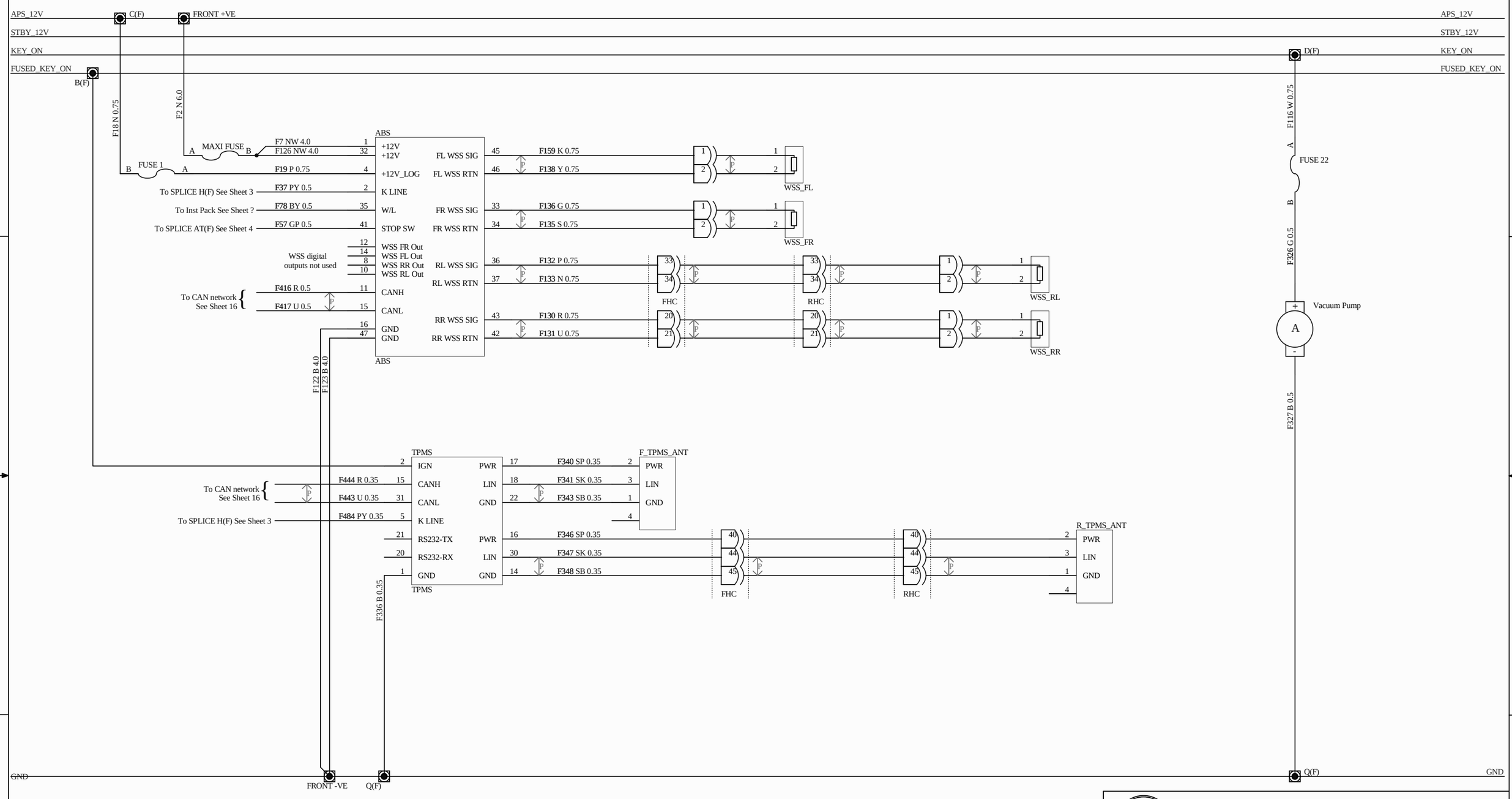

TESLA MOTORS, Inc.

ORIGINATOR: B. Moerdyk	ITEM NAME: ABS & TPMS
DRAWN BY: B. Moerdyk	
CHECKED BY: * DATE *	ITEM NO. 98-000845-00 REVISION: AA DATE: 7/15/2009
ENG APPVL * DATE *	DO NOT SCALE DRAWING SHEET 13 OF 17

THE INFORMATION CONTAINED HEREIN IS DEEMED TO BE CONFIDENTIAL, PROPRIETARY, AND A TRADE SECRET OF TESLA MOTORS. THIS INFORMATION MAY NOT BE USED, REPRODUCED, OR DISCLOSED AS THE DIRECT OR INDIRECT BASIS FOR THE DEVELOPMENT, MANUFACTURE, OR SALE OF PROCESSES OR PRODUCTS WITHOUT THE EXPRESSED WRITTEN CONSENT OF TESLA MOTORS.

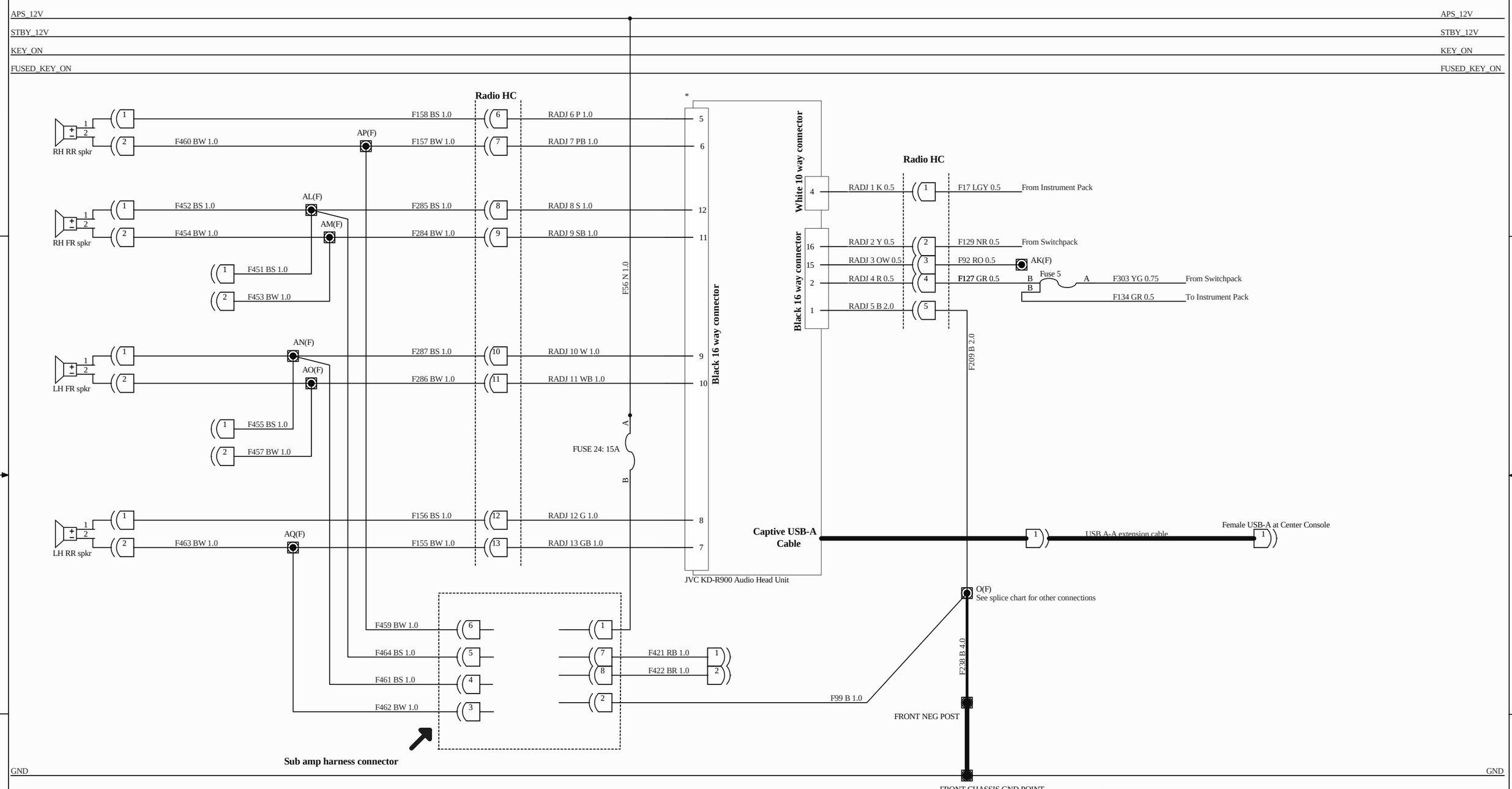

Project:

Lifecycle:

TESLA MOTORS, Inc.

ORIGINATOR: A. Ingram

DRAWN BY: A. Ingram

CHECKED BY: * DATE *

ENG APPVL * DATE *

ITEM NAME: Title Expression

ITEM NO. 98-000845-00

REVISION: AA

DATE: 7/15/2009

DO NOT SCALE DRAWING

SHEET 14 OF 17

THE INFORMATION CONTAINED HEREIN IS DEEMED TO BE CONFIDENTIAL, PROPRIETARY, AND A TRADE SECRET OF TESLA MOTORS. THIS INFORMATION MAY NOT BE USED, REPRODUCED, OR DISCLOSED AS THE DIRECT OR INDIRECT BASIS FOR THE DEVELOPMENT, MANUFACTURE, OR SALE OF PROCESSES OR PRODUCTS WITHOUT THE EXPRESSED WRITTEN CONSENT OF TESLA MOTORS.

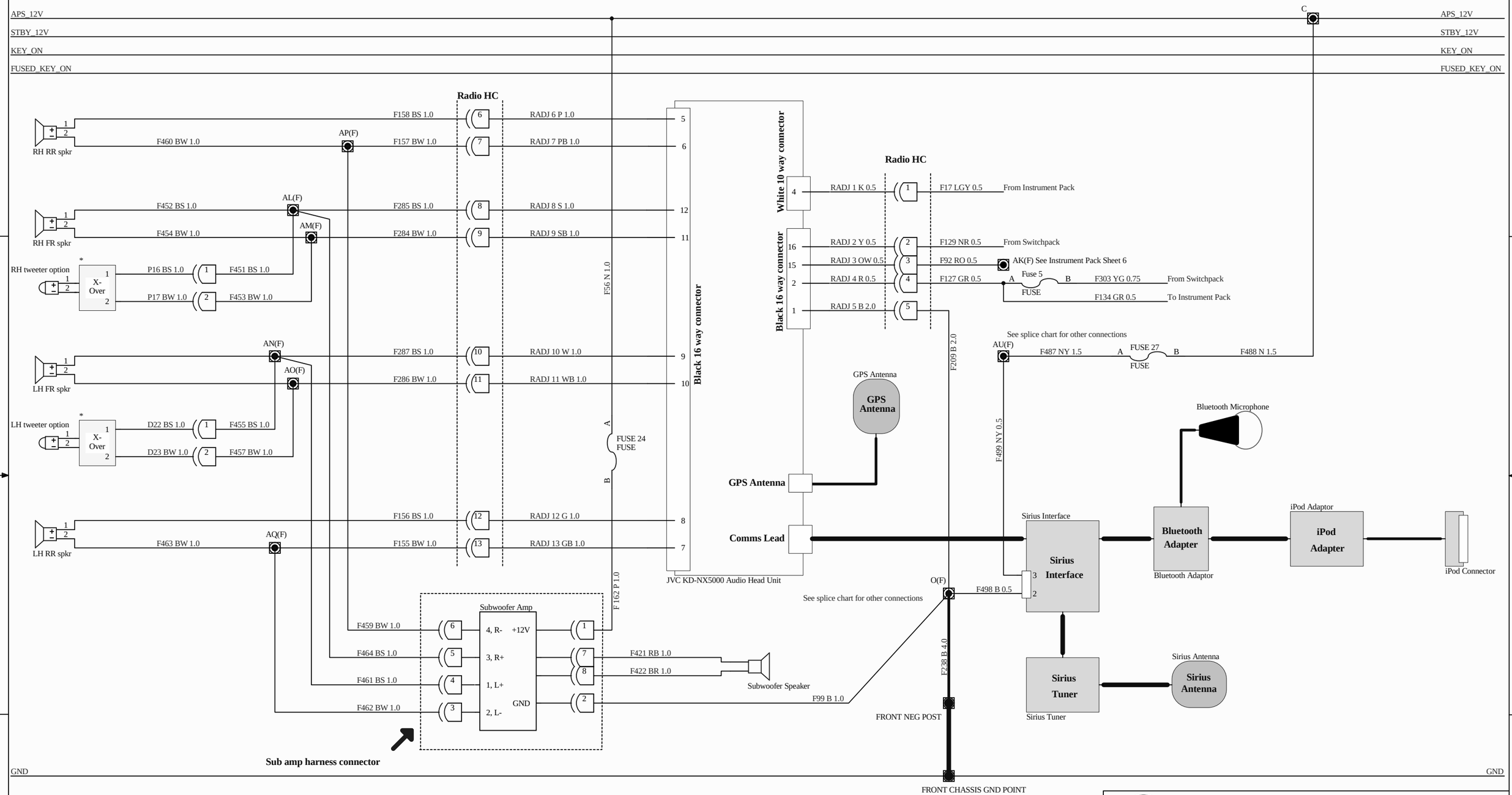

TESLA MOTORS, Inc.

ORIGINATOR: A. Ingram	ITEM NAME: High-End Audio System
DRAWN BY: A. Ingram	
CHECKED BY: * DATE *	ITEM NO. 98-000845-00 REVISION: AA
ENG APPVL * DATE *	DATE: 7/15/2009
	DO NOT SCALE DRAWING SHEET 15 OF 17

THE INFORMATION CONTAINED HEREIN IS DEEMED TO BE CONFIDENTIAL, PROPRIETARY, AND A TRADE SECRET OF TESLA MOTORS. THIS INFORMATION MAY NOT BE USED, REPRODUCED, OR DISCLOSED AS THE DIRECT OR INDIRECT BASIS FOR THE DEVELOPMENT, MANUFACTURE, OR SALE OF PROCESSES OR PRODUCTS WITHOUT THE EXPRESSED WRITTEN CONSENT OF TESLA MOTORS.

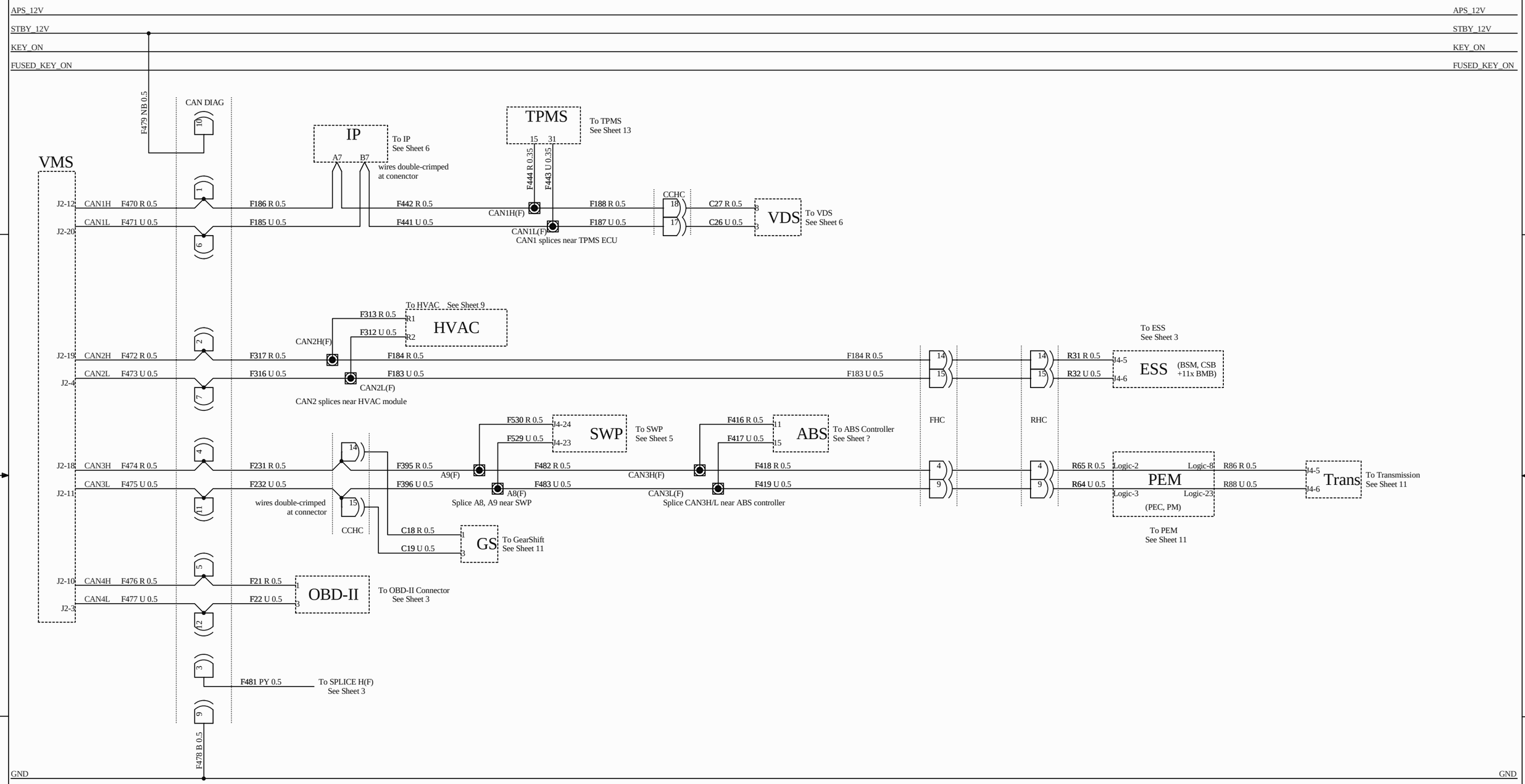

THE INFORMATION CONTAINED HEREIN IS DEEMED TO BE CONFIDENTIAL, PROPRIETARY, AND A TRADE SECRET OF TESLA MOTORS. THIS INFORMATION MAY NOT BE USED, REPRODUCED, OR DISCLOSED AS THE DIRECT OR INDIRECT BASIS FOR THE DEVELOPMENT, MANUFACTURE, OR SALE OF PROCESSES OR PRODUCTS WITHOUT THE EXPRESSED WRITTEN CONSENT OF TESLA MOTORS.

Project:

Lifecycle:

TESLA MOTORS, Inc.

ORIGINATOR: B. Moerdyk

DRAWN BY: B. Moerdyk

CHECKED BY: * DATE *

ENG APPVL * DATE *

ITEM NAME: CAN Network Diagram

ITEM NO. 98-000845-00

REVISION: AA

DATE: 7/15/2009

DO NOT SCALE DRAWING

SHEET 16 OF 17

Project:

Lifecycle:

Front Harness

Splice A(F)
High Beam Switch

Wire#	Destination
81	SPMC3
85	D.I. & Dip Switch
86	Instrument Pack

Splice B(F)
Fused Key On

Wire#	Destination
20	Fuse 7
25	Instrument Pack
41	D.I. & Dip Switch
69	Fan Speed Connector
118	HVAC Control Module
335	TPMS Module
345	Mode Actuator
365	Rear Fog Switch
372	Recirc Actuator
407	A/C Control Panel
414	A/C Control Panel

Splice C(F)
APS +12V

Wire#	Destination
18	Fuse 1
26	Battery +VE Post
94	Fuse 11
328	Fuse 20
329	Fuse 19
433	Emergency Power Diode 1
434	Emergency Power Diode 2
488	Fuse 27

Splice D(F)
Key On

Wire#	Destination
116	Fuse 22
124	SPMC5
169	Fuse 7
174	Fuse 4

Splice E(F)
FR RH DI

Wire#	Destination
43	FR RH Lamp Connector
45	Instrument Pack
277	SPMC4

Splice F(F)
FR LH DI

Wire#	Destination
49	FR LH Lamp Connector
51	Instrument Pack
278	SPMC4

Splice G(F)
Wiper

Wire#	Destination
58	Fuse 4
59	Wiper Motor
60	Wiper Switch
61	Wash-Wipe Module

Splice H(F)
K-Line

Wire#	Destination
37	ABS Controller
236	SRS
241	OBD-II Connector
480	OBD-II Connector
481	CAN Diag Connector
484	TPMS Module

Splice I(F)
Amb/Cabin Temperature Sensor Return

Wire#	Destination
167	HVAC Control Module
315	Ambient Temperature Sensor
388	Cabin Temperature Sensor

Splice J(F)
Chassis GND

Wire#	Destination
35	VMS J3
202	Backlight Dimmer
204	VMS J2
208	Splice XX
478	CAN Diagnostic Connector

Splice L(F)
APS +12V

Wire#	Destination
13	Battery +VE Post
56	Fuse 24
87	Fuse 23
172	Fuse 9
194	Fuse 12
239	Fuse 8
292	Fuse 10
331	HVAC Control Module
332	HVAC Control Module

Splice M(F)
DI / Marker Power

Wire#	Destination
36	SPMC4
38	Fuse 6

Splice N(F)
Right Window Up Switch

Wire#	Destination
107	PDHC1
173	SPMC4
175	DDHC2

Splice O(F)
Chassis GND

Wire#	Destination
93	SPMC2
99	AMP Sub-Harness
205	Trip/ODO Switch
206	Instrument Pack
209	Radio Harness Connector
238	Front -VE Post
266	Cruise Control Switch
334	Homelink Module
408	A/C Request Switch
409	Recirc Request Switch
410	A/C Control Panel
420	A/C Control Panel
520	Glovebox Actuator
523	SPMC3
524	SPMC3

Splice P(F)
Interior Fan

Wire#	Destination
293	HVAC Control Module
294	HVAC Control Module
297	Fuse 3

Splice Q(F)
Chassis GND

Wire#	Destination
52	Hood Switch
101	FR LH Lamp Connector
103	FR RH Lamp Connector
121	Screenwash Pump
210	Wiper Motor
211	Brake Fluid Switch
216	Horn (LH)
240	Front -VE Post
279	FR RH Side Marker
280	FR LH Side Marker
318	GPS Receiver
327	Vacuum Pump
336	TPMS Module
495	Siren Connector
525	Horn 2 (RH)

Splice S(F)
Load Shed

Wire#	Destination
75	SPMC2
299	Fuse 2
319	HVAC Control Module

Splice T(F)
Standby +12V

Wire#	Destination
29	Instrument Pack
53	RKE Receiver
82	Mid Harness Connector
98	SPMC4
114	Center Console Connector
192	VMS J2
333	Homelink Module
375	Tailgate Release Switch
479	CAN Diagnostic Connector
490	Fuse 13
527	Glovebox Switch

Splice U(F)
Chassis GND

Wire#	Destination
120	Interior Lamp
178	Driver's Seat Heater
179	Passenger's Seat Heater
195	HVAC Control Module
212	Interior Fan
220	Wash-Wipe Module
224	Park Brake Switch
237	Aux Power Socket
244	OBD-II Connector
247	OBD-II Connector
273	CHMSL
322	HVAC Control Module
337	HVAC Control Module
351	Front -VE Post
411	HVAC Control Module
528	Splice A7

Splice V(F)
Accelerator Vref

Wire#	Destination
256	Mid Harness Connector
257	Accel Pedal
258	Accel Pedal

Splice Y(F)
Marker Lamp Drive

Wire#	Destination
4	SPMC4
88	Instrument Pack
89	FR LH Lmap Connector
96	FR RH Lamp Connector
97	Mid Harness Connector
110	FR RH Side Marker
111	FR LH Side Marker

Splice Z(F)
Right Window Down Switch

Wire#	Destination
106	PDHC1
170	SPMC4
171	DDHC2

Splice A1(F)
Accelerator Return

Wire#	Destination
260	Accel Pedal
261	Accel Pedal
267	Mid Harness Connector

Splice A2(F)
Battery Services

Wire#	Destination
32	OBD-II Connector
33	Center Console Connector
164	Fuse 8

Splice A3(F)
APS +12V

Wire#	Destination
283	Battery +VE Post
465	SPMC1
466	SPMC1

Splice A4(F)
Auxilliary Battery +VE

Wire#	Destination
311	VMS J3
424	SPMC1
425	SPMC1
426	AUX BATT FUSE

Splice A5(F)
Redundant +12V

Wire#	Destination
23	SPMC 4
248	Immobiliser
298	Ignition Switch
302	Headlamp Switch

Splice A6(F)
Unlock Signal

Wire#	Destination
281	RKE Receiver
485	Alarm Connector
492	VMS J3

Splice A7(F)
Water Pump and Chiller Solenoid Return

Wire#	Destination
91	Mid Harness Connector
338	Mid Harness Conenctor
528	Splice U

Splice A8(F)
CAN bus 3 L

Wire#	Destination
396	Center Console Connector
483	Splice CAN3-L
529	SPMC4

Splice A9(F)
CAN bus 3 H

Wire#	Destination
395	Center Console Connector
482	Splice CAN3-H
530	SPMC4

Splice AA(F)
APS +12V

Wire#	Destination
1	Battery +VE Post
288	Fuse 18
289	Fuse 17
301	Fuse 14

Splice AB(F)
Key On Signal

Wire#	Destination
16	Ignition Switch
55	Immobiliser
74	Mid Harness Connector
227	VMS J2
489	Alarm Connector

Splice AC(F)
Chassis GND

Wire#	Destination
321	HVAC HV Control Module
344	Mode Actuator
362	Cooling Fan 1
369	Cooling Fan 2
374	Front -VE Post
377	Recirc Actuator
378	HVAC Solenoid
502	HVAC HV Control Module
505	Compressor Logic Connector

Splice AD(F)
Mode Actuator Position

Wire#	Destination
339	A/C Control Panel
400	HVAC Control Module
401	Mode Actuator

Splice AJ(F)
"Emergency Power"

Wire#	Destination
428	SPMC4
429	OBD-II Connector
430	OBD-II Connector
431	Emergency Power Diode 1
432	Emergency Power Diode 2

Splice AK(F)
Backlight Dimming 1

Wire#	Destination
92	Radio Harness Connector
115	Instrument Pack
448	Headlamp Switch
449	DDHC1
450	PDHC1

Splice AL(F)
FR RH Speaker +VE

Wire#	Destination
285	Radio Harness Connector
451	PDHC2
452	FR RH Speaker
464	Amp Sub-harness connector

Splice AM(F)
FR RH Speaker -VE

Wire#	Destination
284	Radio Harness Connector
453	PDHC2
454	FR RH Speaker

Splice AN(F)
FR LH Speaker +VE

Wire#	Destination
287	Radio Harness Connector
455	DDHC1
456	FR LH Speaker
461	Amp Sub-harness Connector

Splice AO(F)
FR LH Speaker -VE

Wire#	Destination
286	Radio Harness Connector
457	DDHC1
458	FR LH Speaker

Splice AP(F)
RR RH Speaker -VE

Wire#	Destination
157	Radio Harness Connector
459	Amp Sub-harness Connector
460	RR RH Speaker

Splice AQ(F)
RR LH Speaker -VE

Wire#	Destination
155	Radio Harness Connector
462	Amp Sub-harness Connector
463	RR LH Speaker

Splice AS(F)
"BPS" +12V

Wire#	Destination
95	Fuse 21
290	Fuse 16
291	Fuse 15
295	Fuse 6
467	SPMC1
468	Fuse 26
469	SPMC1

Splice AT(F)
Brake Lamp Drive

Wire#	Destination
27	Mid Harness Connector
34	CHMSL
57	ABS Module
79	(Foot) Brake Switch

Splice AU(F)
APS Services

Wire#	Destination
11	D.I. & DIP Switch
15	Center Console Connector
180	DDHC1
189	PDHC1
199	Backlight Dimmer
320	HVAC Control Module
487	Fuse 27
499	Sirius Interface
504	Compressor

Splice XX(F)
Chassis GND

Wire#	Destination
201	Center Console Connector
208	Splice J
245	Driver Seatbelt Switch
271	SRS Case Ground
274	DDHC2
275	PDHC1
276	Clock Spring
282	VMS J3
325	Front -VE Post
404	RH Side Repeater
405	LH Side Repeater
437	A/C Pressure Sensor

Splice XY(F)
Chassis GND

Wire#	Destination
73	RKE Receiver
203	Headlamp Switch
379	Front -VE Post
423	RKE service Connector
498	Sirius Interface
510	Alarm Connector
511	Alarm Connector

Splice CAN1-H(F)
CAN bus 1 H

Wire#	Destination
188	Center Console Connector
442	Instrument Pack
444	TPMS Module

Splice CAN1-L(F)
CAN bus 1 L

Wire#	Destination
187	Center Console Connector
441	Instrument Pack
443	TPMS Module

Splice CAN2-H(F)
CAN bus 2 H

Wire#	Destination
184	Mid Harness Connector
313	HVAC Control Module
317	CAN Diagnostic Connector

Splice CAN2-L(F)
CAN bus 2 L

Wire#	Destination
183	Mid Harness Connector
312	HVAC Control Module
316	CAN Diagnostic Connector

Splice CAN3-H(F)
CAN bus 3 H

Wire#	Destination
416	ABS Module
418	Mid Harness Connector
482	Splice A9

Splice CAN3-L(F)
CAN bus 3 L

Wire#	Destination
417	ABS Module
419	Mid Harness Connector
483	Splice A8

Splice CAN4-H(F)
CAN bus 4 H

Wire#	Destination
500	Compressor
506	HVAC HV Control Module
508	HVAC Control Module

Splice CAN4-L(F)
CAN bus 4 L

Wire#	Destination
501	Compressor
507	HVAC HV Control Module
509	HVAC Control Module

Rear Harness

Splice A(R)
Reverse Lamp Drive

Wire#	Destination
1	PEM Logic Connector
2	RR LH Lamp Unit
3	RR RH Lamp Unit

Splice B(R)
Stop Lamp Drive

Wire#	Destination
6	RR RH Lamp Unit
7	RR LH Lamp Unit
39	PEM Logic Connector
116	Mid Harness Connector

Splice C(R)
Chassis GND

Wire#	Destination
8	Chassis GND
9	RR RH Lamp Unit
10	RR LH Lamp Unit
21	License Plate Lamp
22	RR RH Side Marker
23	RR LH Side Marker
30	Tailgate Sensor
50	PEM Logic Connector
76	Charge Port Door Switch
122	Transmission Connector

Splice D(R)
Purpose

Wire#	Destination
13	Mid Harness Connector
14	RR LH Lamp Unit
15	License Plate Lamp
17	RR RH Lamp Unit
18	RR RH Side Marker
19	RR LH Side Marker

Splice E(R)
Tailgate Open Sensor

Wire#	Destination
27	Mid Harness Connector
28	Trunk Interior Lamp
29	Tailgate Sensor

Splice F(R)
Coolant Pump Return

Wire#	Destination
82	Mid Harness Connector
131	Coolant Pump 1
132	Coolant Pump 2

Splice G(R)
Coolant Pump Drive

Wire#	Destination
83	Mid Harness Connector
133	Coolant Pump 1
134	Coolant Pump 2

Splice S(R)
Rear Fog Lamp Drive

Wire#	Destination
101	Mid Harness Connector
103	RR LH Lamp Connector
105	RR RH Lamp Connector

Center Console Harn.

Splice A(C)
Chassis GND

Wire#	Destination
3	Hazard Switch
5	Hazard Switch
6	Ambient LED
13	Passenger's Seat Heater Switch
17	Driver's Seat Heater Switch
21	Gearshift Connector
23	Main Harness Connector

Driver Door Harn.

Splice A(D)
+12V

Wire#	Destination
3	Main Harness Connector 1
19	Driver's Window Switch
20	Passenger's Window Switch
24	Locking Control Switch

Splice B(D)
Chassis GND

Wire#	Destination
4	Main Harness Connector 2
5	Locking Control Switch
25	Driver's Window Switch
27	Passenger's Window Switch
29	Door Release Switch
30	Lock/Latch

Splice D(D)
Backlight Illumination

Wire#	Destination
16	Main Harness Connector 1
17	Driver's Window Switch
18	Passenger's Window Switch
21	Locking Control Switch

Passenger Door Harn.

Splice A(P)
Chassis GND

Wire#	Destination
4	Main Harness Connector 1
12	[Passenger's] Window Switch
14	Door Release Switch
15	Lock/Latch

Notes:
Wire numbers in these tables are local to the respective harness

THE INFORMATION CONTAINED HEREIN IS DEEMED TO BE CONFIDENTIAL, PROPRIETARY, AND A TRADE SECRET OF TESLA MOTORS. THIS INFORMATION MAY NOT BE USED, REPRODUCED, OR DISCLOSED AS THE DIRECT OR INDIRECT BASIS FOR THE DEVELOPMENT, MANUFACTURE, OR SALE OF PROCESSES OR PRODUCTS WITHOUT THE EXPRESSED WRITTEN CONSENT OF TESLA MOTORS.

TESLA MOTORS, Inc.

ORIGINATOR: B. Moerdyk

DRAWN BY: B. Moerdyk

CHECKED BY: * DATE *

ENG APPVL * DATE *

ITEM NAME: Splice Charts

ITEM NO. 98-000845-00

REVISION: AA

DATE: 7/15/2009

DO NOT SCALE DRAWING

SHEET 17 OF 17